BUL805

High voltage fast-switching NPN power transistor

Features

- High voltage capability
- Low spread of dynamic parameters
- Minimum lot-to-lot spread for reliable operation
- Very high switching speed

Description

The device is manufactured using high voltage multi-epitaxial planar technology for high switching speeds and high voltage capability. It uses a cellular emitter structure with planar edge termination to enhance switching speeds. The device is designed for use as PFC in high frequency ballast half bridge voltage fed topology.

Applications

- Electronic ballast for fluorescent lighting
- Dedicated for PFC solution in half-bridge voltage fed topology.

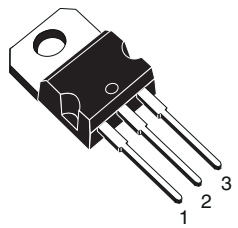

TO-220

Figure 1. Internal schematic diagram

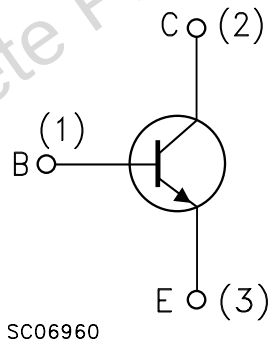

Table 1. Device summary

Order code	Marking	Package	Packaging
BUL805	BUL805	TO-220	Tube

Obsolete Product(s) - Obsolete Product(s)

Contents

1 Electrical ratings 3

2 Electrical characteristics 4

3 Package mechanical data 5

4 Revision history 7

Obsolete Product(s) - Obsolete Product(s)

1 Electrical ratings

Table 2. Absolute maximum rating

Symbol	Parameter	Value	Unit
V_{CES}	Collector-emitter voltage (V_{BE} = 0)	800	V
V_{CEO}	Collector-emitter voltage (I_B = 0)	450	V
V_{EBO}	Emitter-base voltage (I_C = 0)	9	V
I_C	Collector current	5	A
I_{CM}	Collector peak current (t_P < 5ms)	10	A
I_B	Base current	2	A
I_{BM}	Base peak current (t_P < 5ms)	4	A
P_{tot}	Total dissipation at T_C = 25°C	80	W
T_{stg}	Storage temperature	-65 to 150	°C
T_J	Max. operating junction temperature	150	°C

Table 3. Thermal data

Symbol	Parameter		Value	Unit
$R_{thj-case}$	Thermal resistance junction-case	max	1.56	°C/W
$R_{thj-amb}$	Thermal resistance junction-amb	max	62.5	°C/W

Obsolete Product(s) - Obsolete Product(s)

2 Electrical characteristics

(T_{case} = 25 °C unless otherwise specified)

Table 4. Electrical characteristics

Symbol	Parameter	Test conditions	Min.	Typ.	Max.	Unit
I_{CES}	Collector cut-off current (V_{BE} = 0)	V_{CE} = 800 V V_{CE} = 800 V T_C = 125 °C			100 500	µA µA
I_{CEO}	Collector cut-off current (I_B = 0)	V_{CE} = 450 V			250	µA
V_{EBO}	Emitter-base voltage (I_C = 0)	I_E = 10 mA	9			V
$V_{CEO(sus)}$ (1)	Collector-emitter sustaining voltage (I_B = 0)	I_C = 10 mA	450			V
$V_{CE(sat)}$ (1)	Collector-emitter saturation voltage	I_C = 1 A I_B = 0.2 A I_C = 2 A I_B = 0.4 A I_C = 3 A I_B = 0.6 A			0.4 0.6 0.8	V V V
$V_{BE(sat)}$ (1)	Base-emitter saturation voltage	I_C = 1 A I_B = 0.2 A I_C = 2 A I_B = 0.4 A I_C = 3 A I_B = 0.6 A			1.1 1.3 1.5	V V V
h_{FE}	DC current gain	I_C = 10 mA V_{CE} = 5 V I_C = 2 A V_{CE} = 5 V	10 10		 20	

(1) Pulsed duration = 300 µs, duty cycle ≤ 1.5%

Obsolete Product(s) - Obsolete Product(s)

3 Package mechanical data

In order to meet environmental requirements, ST offers these devices in ECOPACK® packages. These packages have a Lead-free second level interconnect. The category of second level interconnect is marked on the package and on the inner box label, in compliance with JEDEC Standard JESD97. The maximum ratings related to soldering conditions are also marked on the inner box label. ECOPACK is an ST trademark. ECOPACK specifications are available at: www.st.com

Obsolete Product(s) - Obsolete Product(s)

TO-220 mechanical data

Dim	mm			inch		
	Min	Typ	Max	Min	Typ	Max
A	4.40		4.60	0.173		0.181
b	0.61		0.88	0.024		0.034
b1	1.14		1.70	0.044		0.066
c	0.48		0.70	0.019		0.027
D	15.25		15.75	0.6		0.62
D1		1.27			0.050	
E	10		10.40	0.393		0.409
e	2.40		2.70	0.094		0.106
e1	4.95		5.15	0.194		0.202
F	1.23		1.32	0.048		0.051
H1	6.20		6.60	0.244		0.256
J1	2.40		2.72	0.094		0.107
L	13		14	0.511		0.551
L1	3.50		3.93	0.137		0.154
L20		16.40			0.645	
L30		28.90			1.137	
∅P	3.75		3.85	0.147		0.151
Q	2.65		2.95	0.104		0.116

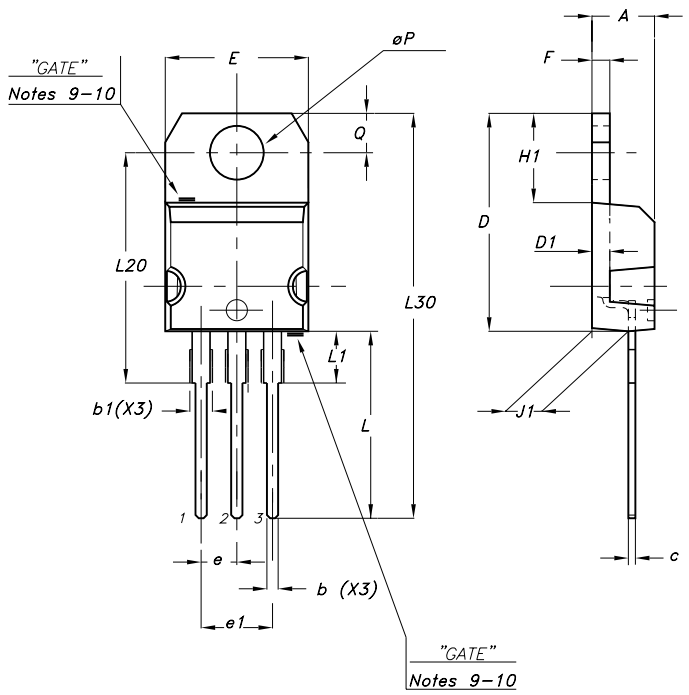

Obsolete

4 Revision history

Table 5. Document revision history

Date	Revision	Changes
19-May-2006	1	Initial release.
15-Jul-2008	2	Document status promoted from preliminary data to datasheet.

Obsolete Product(s) - Obsolete Product(s)

Please Read Carefully:

Information in this document is provided solely in connection with ST products. STMicroelectronics NV and its subsidiaries (“ST”) reserve the right to make changes, corrections, modifications or improvements, to this document, and the products and services described herein at any time, without notice.

All ST products are sold pursuant to ST’s terms and conditions of sale.

Purchasers are solely responsible for the choice, selection and use of the ST products and services described herein, and ST assumes no liability whatsoever relating to the choice, selection or use of the ST products and services described herein.

No license, express or implied, by estoppel or otherwise, to any intellectual property rights is granted under this document. If any part of this document refers to any third party products or services it shall not be deemed a license grant by ST for the use of such third party products or services, or any intellectual property contained therein or considered as a warranty covering the use in any manner whatsoever of such third party products or services or any intellectual property contained therein.

UNLESS OTHERWISE SET FORTH IN ST’S TERMS AND CONDITIONS OF SALE ST DISCLAIMS ANY EXPRESS OR IMPLIED WARRANTY WITH RESPECT TO THE USE AND/OR SALE OF ST PRODUCTS INCLUDING WITHOUT LIMITATION IMPLIED WARRANTIES OF MERCHANTABILITY, FITNESS FOR A PARTICULAR PURPOSE (AND THEIR EQUIVALENTS UNDER THE LAWS OF ANY JURISDICTION), OR INFRINGEMENT OF ANY PATENT, COPYRIGHT OR OTHER INTELLECTUAL PROPERTY RIGHT.

UNLESS EXPRESSLY APPROVED IN WRITING BY AN AUTHORIZE REPRESENTATIVE OF ST, ST PRODUCTS ARE NOT DESIGNED, AUTHORIZED OR WARRANTED FOR USE IN MILITARY, AIR CRAFT, SPACE, LIFE SAVING, OR LIFE SUSTAINING APPLICATIONS, NOR IN PRODUCTS OR SYSTEMS, WHERE FAILURE OR MALFUNCTION MAY RESULT IN PERSONAL INJURY, DEATH, OR SEVERE PROPERTY OR ENVIRONMENTAL DAMAGE.

Resale of ST products with provisions different from the statements and/or technical features set forth in this document shall immediately void any warranty granted by ST for the ST product or service described herein and shall not create or extend in any manner whatsoever, any liability of ST.

ST and the ST logo are trademarks or registered trademarks of ST in various countries.

Information in this document supersedes and replaces all information previously supplied.

The ST logo is a registered trademark of STMicroelectronics. All other names are the property of their respective owners.

© 2008 STMicroelectronics - All rights reserved

STMicroelectronics group of companies

Australia - Belgium - Brazil - Canada - China - Czech Republic - Finland - France - Germany - Hong Kong - India - Israel - Italy - Japan - Malaysia - Malta - Morocco - Singapore - Spain - Sweden - Switzerland - United Kingdom - United States of America

www.st.com